THIS DRAWING IS UNPUBLISHED. RELEASED FOR PUBLICATION -,- .
© COPYRIGHT - BY TYCO ELECTRONICS CORPORATION. ALL RIGHTS RESERVED.

LOC	DIST
CM	00

REVISIONS

P	LTR	DESCRIPTION	DATE	DWN	APVD
	O	REVISED PER 0G3B-1111-04	21JUNE05	KW	DC

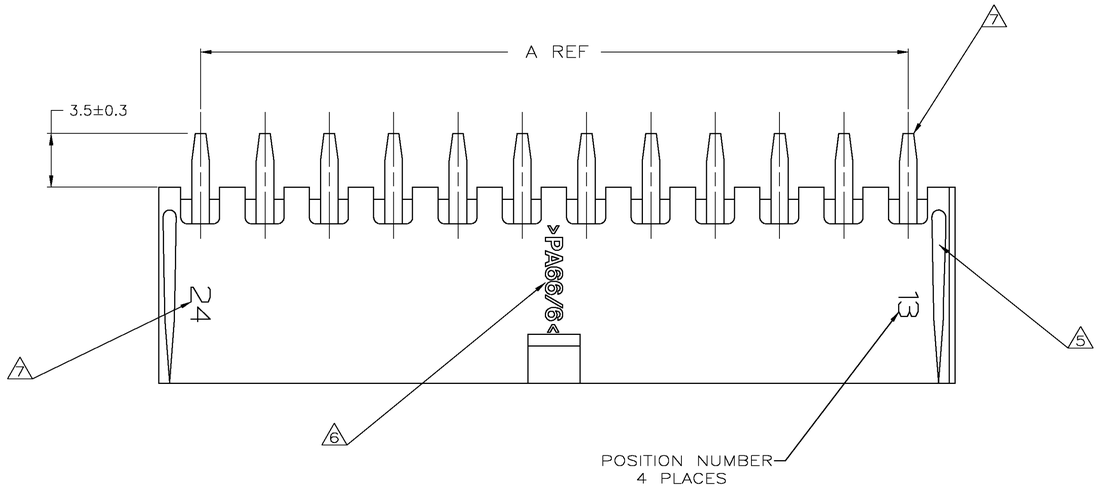

1. MATERIAL: HOUSING – NYLON, UL94V-0 (COLOR – WHITE, COLOR OF PARTS MAY VARY). CONTACTS – 0.25 THK COPPER ALOY.
2. CONTACT FINISH: 0.00076 MIN THK GOLD PLATE ON PIN MATING SURFACE, 0.003 MIN THK TIN PLATE ON SOLDER TAIL, ALL OVER 0.00127 MIN THK NICKEL BASE PLATE.
3. SOLDER TAIL MEETS AMP SOLDERABILITY SPECIFICATION 109-11-2.
4. MATES WITH SIMILARLY PLATED AMP-DUAC™ POWER CONNECTOR RECEPTACLE HOUSINGS/SOCKET CONTACTS.
5. RIBS ON FOUR CORNERS OPTIONAL.
6. AMP LOGO AND MATERIAL ID MAY BE LOCATED ON EITHER LONG SIDE OF PART.
7. SIZE, SHAPE OR STYLE OF THIS FEATURE MAY VARY.

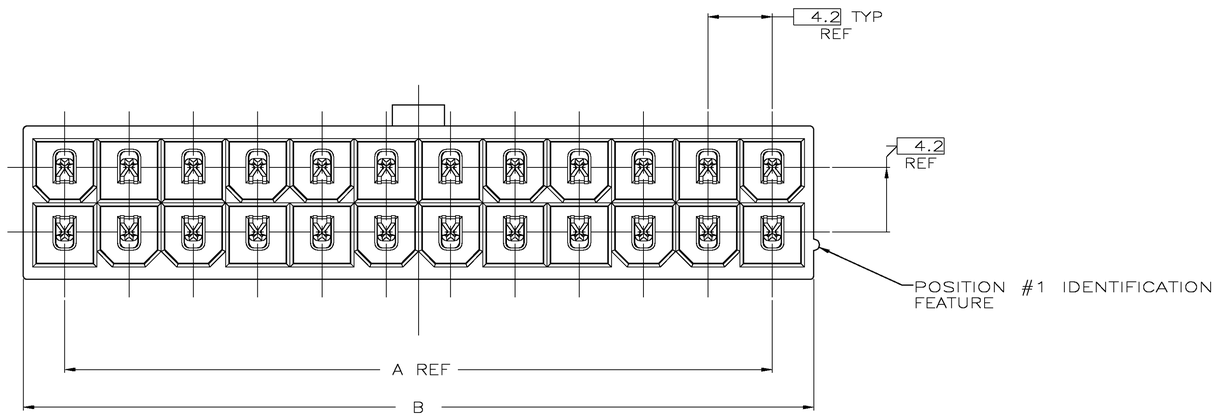

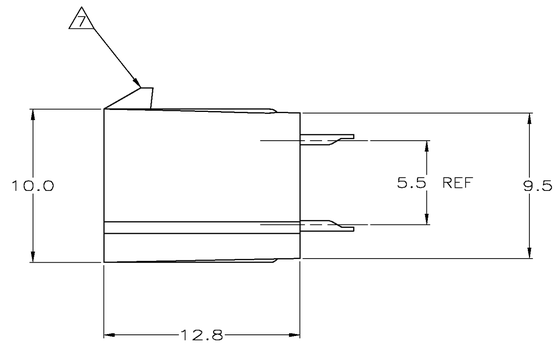

B	A	NO. OF POSITIONS	PART NO
51.6	46.2	24	2-1586496-4
47.4	42.0	22	2-1586496-2
43.2	37.8	20	2-1586496-0
39.0	33.6	18	1-1586496-8
34.8	29.4	16	1-1586496-6
30.6	25.2	14	1-1586496-4
26.4	21.0	12	1-1586496-2
22.2	16.8	10	1-1586496-0
18.0	12.6	8	1586496-8
13.8	8.4	6	1586496-6
9.6	4.2	4	1586496-4
5.4	0.0	2	1586496-2

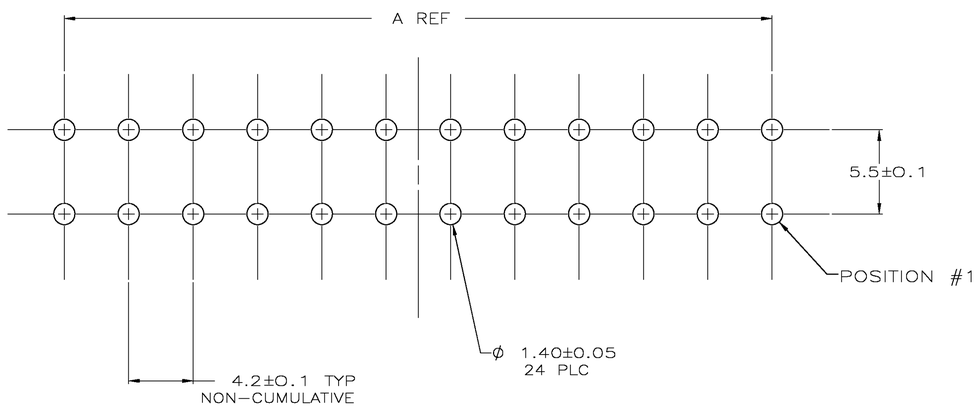

RECOMMENDED MOUNTING HOLE PATTERN
FOR 1.78 MAX THICK P.C. BOARD
COMPONENT SIDE SHOWN

METRIC

THIS DRAWING IS A CONTROLLED DOCUMENT.

DIMENSIONS: mm

TOLERANCES UNLESS OTHERWISE SPECIFIED:
0 PLC ± –
1 PLC ± 0.2
2 PLC ± 0.13
3 PLC ± –
4 PLC ± –
ANGLES ± 0°30'

MATERIAL 1 FINISH 2

DWN K. WHITAKER 21JUNE2005
CHK D. COLEY 21JUNE2005
APVD D. COLEY 21JUNE2005
PRODUCT SPEC 108-1699
APPLICATION SPEC –
WEIGHT –

Tyco Electronics Corporation
Harrisburg, Pa 17105-3608

NAME ASSEMBLY, HEADER, VERTICAL, GOLD PLATED, W/O PEGS, W/O DRAIN HOLES, 94V-0,AMP-DUAC

SIZE	CAGE CODE	DRAWING NO	RESTRICTED TO
A1	00779	C-1586496	–

CUSTOMER DRAWING SCALE 5:1 SHEET 1 OF 1 REV O

AMP 4805 REV 31MAR2000